Name _____ **Period** _____ **Date** _____

Genetics Review Worksheet

The Steps Associated With Solving a Genetics Problem:

****** If you take the time to follow the directions below, you will be able to solve most genetics problems.*****

1. **Determine** the **genotypes** of the parents or whatever is given in problem.
2. Set up your **Punnett Square** based on possible gametes that can be formed. During **meiosis** (the formation of sex cells), one member (allele) of each gene pair separate. [Mendel's law of segregation]

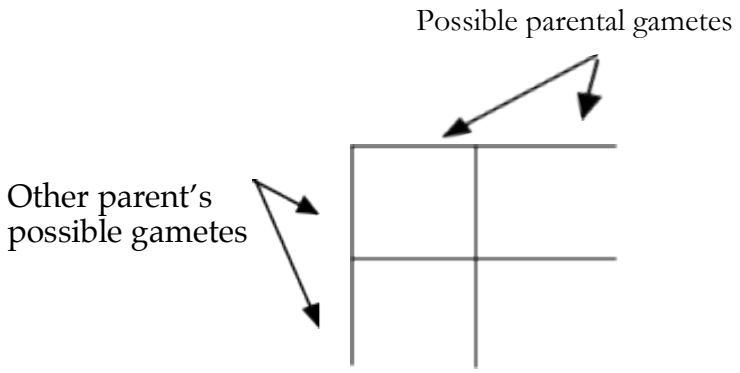

3. **Fill in** the squares. <u>This represents the possible combinations that could occur during fertilization</u>.

Part 1 Introduction:

1. Describe the genotypes given (use your notes). The first two are already done.

   A. DD _____ D. ss _____

   B. Dd _____ E. Yy _____

   C. dd _____ F. WW _____

2. In humans, brown eye color (B), is dominant over blue eye color (b). What are the **phenotypes** of the following genotypes? In other words, what color eyes will they have?

   A. BB _____ B. bb _____ C. Bb _____

Part 2A: Monohybrid Cross

When we study the inheritance of a single gene it is called a monohybrid cross. ****Below are several problems.**

1. A heterozygous, smooth pea pod, plant is crossed with a wrinkled pea pod plant. Predict the offspring from this cross.

a. What is the genotype of the parents? Parent 1:_____ Parent 2: _____

b. Set up a Punnett Square with possible gametes.

c. Fill in the Punnett Square for the resultant offspring.

d. What is probability of having a wrinkled offspring? _____

e. What is probability of having a smooth offspring? _____

f. What is probability of having a heterozygous offspring? _____

g. If this cross-produced 50 seeds, how many would you predict to have a wrinkled pod? _____

2. In humans, acondroplasia "dwarfism" (D) is dominant over normal (d). A homozygous dominant (DD) person dies before the age of one. A heterozygous (Dd) person is dwarfed. A homozygous recessive individual is normal. A heterozygous dwarf man marries a dwarf heterozygous woman.

a. What is the probability of having a normal child? _____

b. What is the probability that the next child will **also** be normal? _____

c. What is the probability of having a child that is a dwarf? _____

d. What is the probability of having a child that dies at one from this disorder? _____

3. In humans, free earlobes (F) is dominant over attached earlobes (f). If one parent is homozygous dominant for free earlobes, while the other has attached earlobes can they produce any children with attached earlobes? Show your work!

4. In humans widow's peak (W) is dominant over straight hairline (w). A heterozygous man for this trait marries a woman who is also heterozygous.

a. List possible genotypes of their offspring.

b. What is the probability of having a child with widow's peak?

5. You found a wild, black mouse. Explain how you would determine the genotype of this mouse. Use the test-cross. (*Hint in mice, black fur is dominant and white fur is recessive.*)

Part 2B: Dihybrid Cross

When we study two traits on different chromosomes, at one time, we call this a dihybrid cross. You still follow the same five-step process for Monohybrid crosses but now there will be four times as many possibilities because we are studying two traits.

E.g. A female guinea pig heterozygous for both fur color and coat texture is crossed with a male that has light fur color and is heterozygous for coat texture. What possible offspring can they produce? Dark fur color is dominant (D) and light fur (d) is recessive. Rough coat texture (R) is dominant, while smooth coat (r) is recessive.

Step 1: The guinea pig that is heterozygous for both color and texture this means it has one allele for each trait. Therefore its genotype would be "**Dd Rr**". The other guinea pig has light fur; since that is a recessive trait the genotype for that trait must be "**dd**". It is also heterozygous for fur texture, which means a genotype of "**Rr**". All together its overall genotype must be "**ddRr**".

Step 2 and 3: The Punnett square will be larger now because there are more possible sperm and egg combinations. During the formation of sperm a "D" could go with a "R" producing a sperm "DR", or a "D" could go with a "r" forming a sperm with "Dr." Filling-in the Punnett square it should look like the one we started below. Finish off filling in the Punnett square.

	DR	**Dr**	**dR**	**dr**
dR	**DdRR**			
dr				

Step 4: After filling-in the Punnett square you should obtain the following genotypic ratio: *remember the numbers should add up to the number of squares filled in:

1 (DdRR) : **2** (DdRr) : **1** (Ddrr) : **1** (ddRR) : **2** (ddRr) : **1** (ddrr)

Step 5: There will be only four different phenotypes because the DdRr and the DdRR will have **dark** fur with **rough** coat, and the ddRr and the ddRR will have **light** fur with **rough** coat, while the Ddrr will have **dark** fur with **smooth** coat and the ddrr will have **light** fur with **smooth** coat.

Therefore the phenotypic ratio would be: **3** dark rough: **1** dark smooth: **3** light rough: **1** light smooth

1. **In pea plants, the round seed allele is dominant over the wrinkled seed allele, and the yellow seed allele is dominant over the green seed allele. The genes for seed texture and those for seed color are on different chromosomes. A plant heterozygous for seed texture and seed color is crossed with a plant that is wrinkled and heterozygous for seed color. R** = round, **r** = wrinkled, **Y**= yellow, **y** = green

   a. Construct a Punnett square for this cross.

   b. What is the expected **phenotypic** ratio for the offspring?

2. **In humans there is a disease called Phenylketonuria (PKU), which is caused by a recessive allele. People with this allele have a defective enzyme and cannot break down the amino acid phenylalanine. This disease can result in mental retardation or death. Let "E" represent the normal enzyme. Also in humans in a condition called galactose intolerance or galactosemia, which is also caused by a recessive allele. Let "G" represent the normal allele for galactose digestion. In both diseases, normal dominates over recessive. If two adults were heterozygous for both traits (EeGg), what are the chances of having a child that is completely normal? Has just PKU? Has just galactosemia? Has both diseases?**

Part 3: Working Backwards

Some times we only know about the offspring and we want to learn about the parents. If you have been paying attention, you should have started to notice a pattern. For example, when both parents are heterozygous ¾ of children will have the dominant phenotype and ¼ will have the recessive phenotype. If one parent is homozygous recessive and the other is heterozygous, ½ of the children will be with dominant phenotype and the other half with recessive. Keeping this in mind see if you can solve the next two problems.

1. In pea plants, yellow seeds (Y) are dominant and green seeds (y) are recessive. A pea plant with yellow seeds is crossed with a pea plant with green seeds. The resulting offspring have about equal numbers of yellow and green seeded plants. What are the genotypes of the parents?

2. In another cross, a yellow seeded plant was crossed with another yellow seeded plant and it produced offspring of which about 25% were green seeded plants. What are the genotypes of both parents?

Part 4: Incomplete Dominance

In Four o'clock flowers, the alleles for flower color are both equal therefore neither dominates over the other. We call this condition incomplete dominance and it violates Mendel's principle of dominance. ***A red four o'clock flower (C^RC^R) is crossed with a white flower (C^WC^W).*** *Since there is no dominant trait we use two different little letters for the genotype.*

All of the offspring will be "C^RC^W".

All of the offspring will have one of each allele (C^RC^W), so all will be pink.

Now do it yourself:

1. Predict the offspring when two pink Four o'clock flowers are crossed.

a. Complete a Punnett square for this cross.

b. What is the chance of having a pink flower? _____

c. What is the chance of having a white flower? _____

2. Cross a curly hair female with a wavy haired male.

a. Complete a Punnett square for this cross.

b. What are the chances of having a curly haired child? _____

Part 5: SEX LINKED TRAITS

Background info: in humans, the twenty-third pair of chromosomes known as "sex chromosomes" determines sex. If you have two x-shaped (XX) chromosomes, you are destined to be a female. If you have an x and a Y-shaped (XY) chromosome, you are destined to be a male. Since the **X** and **Y** chromosomes carry different information, any genes found on the **X** chromosomes are referred to as **sex-linked genes.** Therefore, women will have two alleles for these genes because they have two (XX) chromosomes. On the other hand, men have only one allele for each of these genes because they have only one X chromosome (XY).

1. Hemophilia is a sex-linked trait. A person with hemophilia is lacking certain proteins that are necessary for normal blood clotting. Hemophilia is caused by a recessive allele so use "H" for normal and "h" for hemophilia. Since hemophilia is sex-linked, remember a woman will have two alleles (X^HX^H or X^HX^h or X^hX^h) but a man will have only one allele (X^h or X^H). **A woman who is heterozygous (a carrier) for hemophilia marries a normal man:**

a. What are the genotypes of the parents? _____ (Mom) _____ (Dad)

b. Make a Punnett square for the above cross.

c. What is the probability that a male offspring will have hemophilia? _____

d. What is the probability of having a hemophiliac female offspring? _____

2. **Can a colorblind female have a son that has normal vision? Color blindness is caused by a sex-linked recessive allele.** Use the letter "B" or "b". Show your work!

3. **Baldness is a sex-linked trait. What parental genotypes could produce a bald woman?** *use H = normal hair, and h = bald.

Part 6: Codominance

Background Info: So far we have studied traits or genes that are coded for by just two alleles. For example, there was one allele for brown eye color and one allele for blue eye color. However, some traits are coded for by more than two alleles. One of these is blood type in humans. This is a violation of Mendel's Principle of unit characteristics.

In humans, there are four types of blood; type A, type B, type AB, and type O. The alleles A and B are codominant to each other and the O allele is recessive to both A and B alleles. So a person with the genotype $I^{A}\mathbf{I}^{A}$ or $I^{A}\mathbf{i}$ will have **A type** of blood.

1. A. What possible genotypes will produce B type of blood? _____

   B. What is the only genotype that will produce O type of blood? _____

   C. What is the only genotype that will produce AB type of blood? _____

2. You are blood type O and you marry a person with blood type AB.

   A. Complete a Punnett square for this cross.
   B. List the possible blood types (phenotypes) of your offspring. _____

3. In the 1950's, a young woman sued film star/director Charlie Chaplin for parental support of her illegitimate child. Charlie Chaplin's blood type was already on record as type AB. The mother of the child had type A and her son had type O blood. Complete a Punnett square for the possible cross of Charlie and the mother. Was it possible for Mr. Chaplin to be the father this baby?

Part 7: Pedigree Charts:

In genetics, traits can be traced over several generations similar to a family tree. This family tree is called a Pedigree chart. Pedigree charts are useful in gathering background genetic information that can be used for medical reasons.

1. Label the genotype for each of the individuals below its symbol on the pedigree chart
   (Note: eye color is **not** a sex-linked trait).

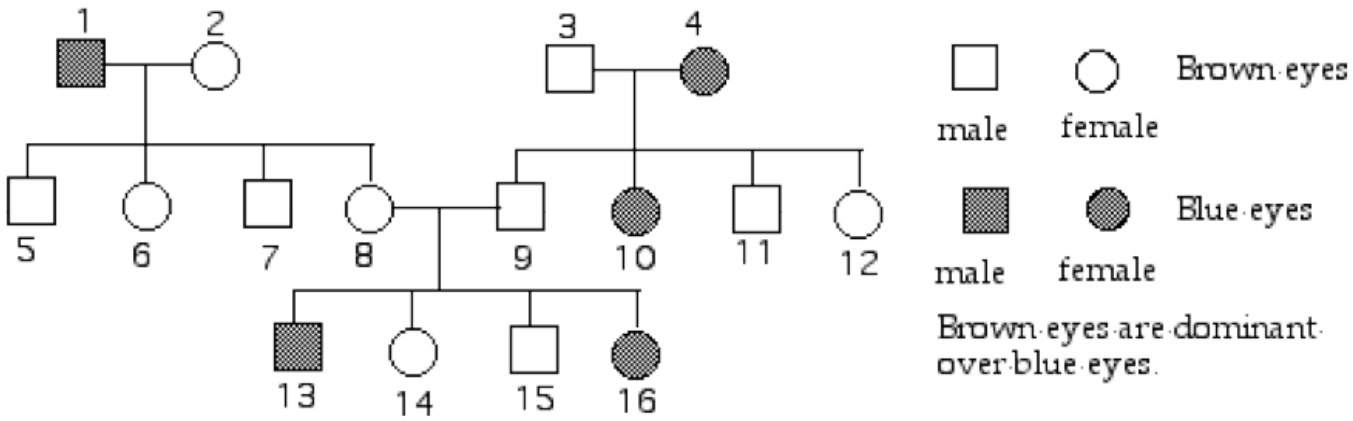

1. _____	5. _____	9. _____	13. _____
2. _____	6. _____	10. _____	14. _____
3. _____	7. _____	11. _____	15. _____
4. _____	8. _____	12. _____	16. _____

2. List the possible genotypes of all the members of the following hemophilia pedigree chart below. **Remember** hemophilia **is** a **sex-linked trait** that is caused by a **recessive allele,** therefore you must denote the individuals' sex chromosomes as well as the hemophilia allele.

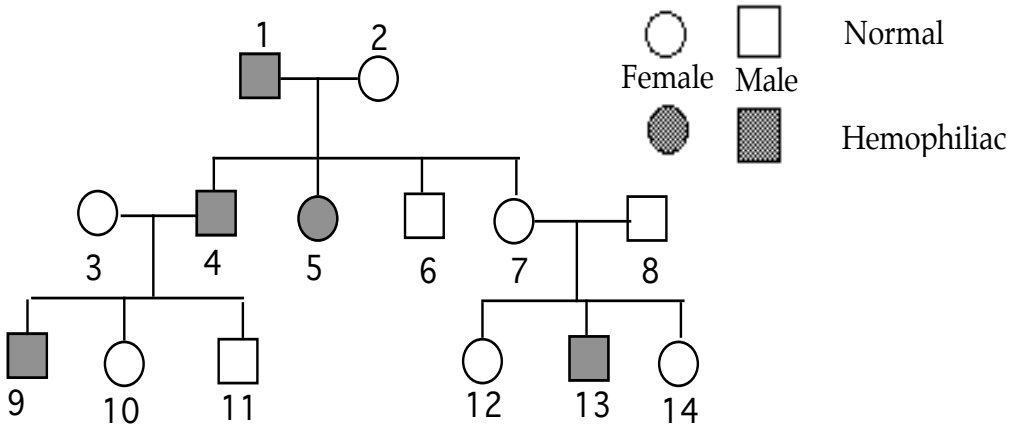

1. _____	5. _____	9. _____	13. _____
2. _____	6. _____	10. _____	14. _____
3. _____	7. _____	11. _____	
4. _____	8. _____	12. _____	

3. Examine the following pedigree chart of color-blindness. In humans, color blindness is caused by a **recessive sex-linked** allele.

a. Which individuals are carriers? _____

b. How would you show them on the pedigree? _____

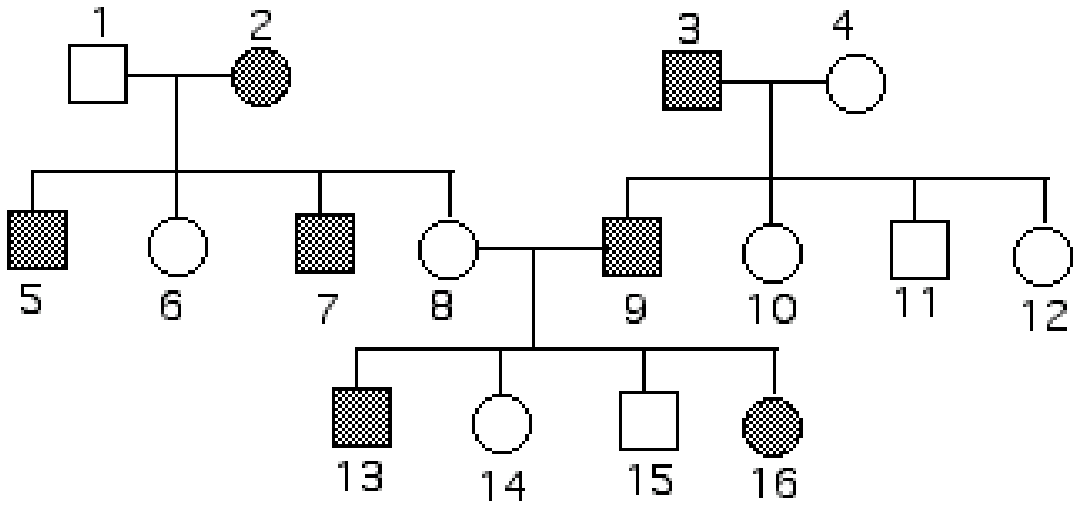

4. A blue-eyed man (1) whose parents were brown eyed (2 & 3), marries a brown eyed woman (4), whose father was brown eyed (5) and whose mother (6) was blue eyed. They have one female child who is blue eyed (7). Blue eyes are recessive.

a. Make a pedigree chart based on the above information.

b. Label the genotypes of the individuals in the chart.